suncast® COMMERCIAL

To learn about other Suncast products, please call
1-800-846-2345 or 1-630-879-2050.

Product Feedback? Go To: Suncastcommercial.com/feedback
OR email us at: feedback@suncastcommercial.com

ITEM NUMBER: MDPTSD2436 / MDPTSD2448 / MDPTSD3060 STANDARD DUTY
MDPTHD2448 / MDPTHD3060 HEAVY DUTY

PARTS

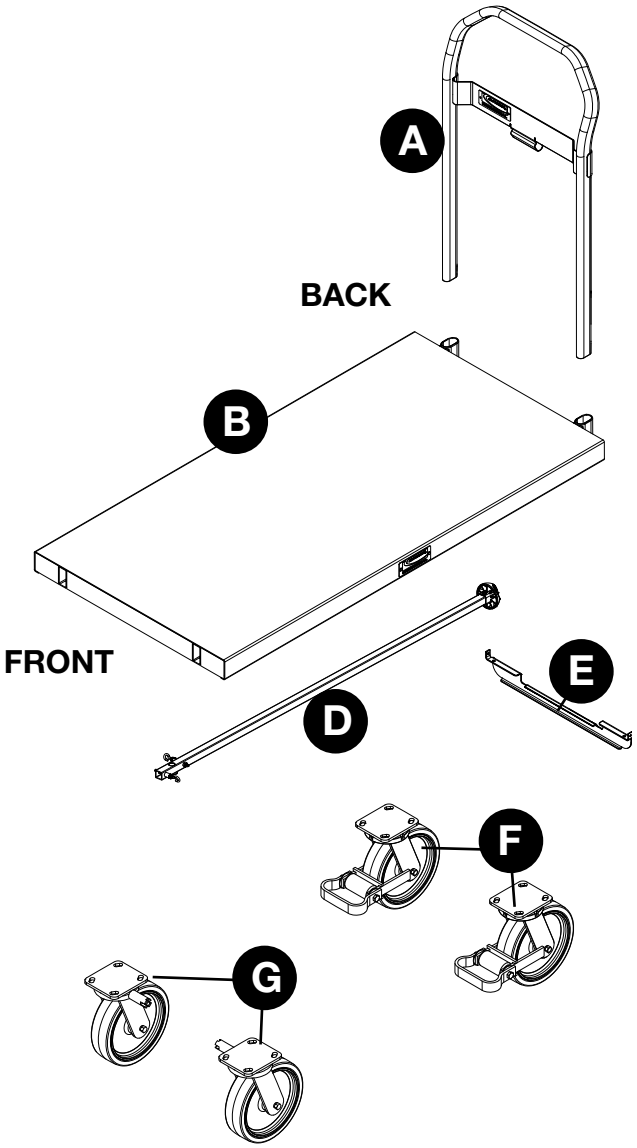

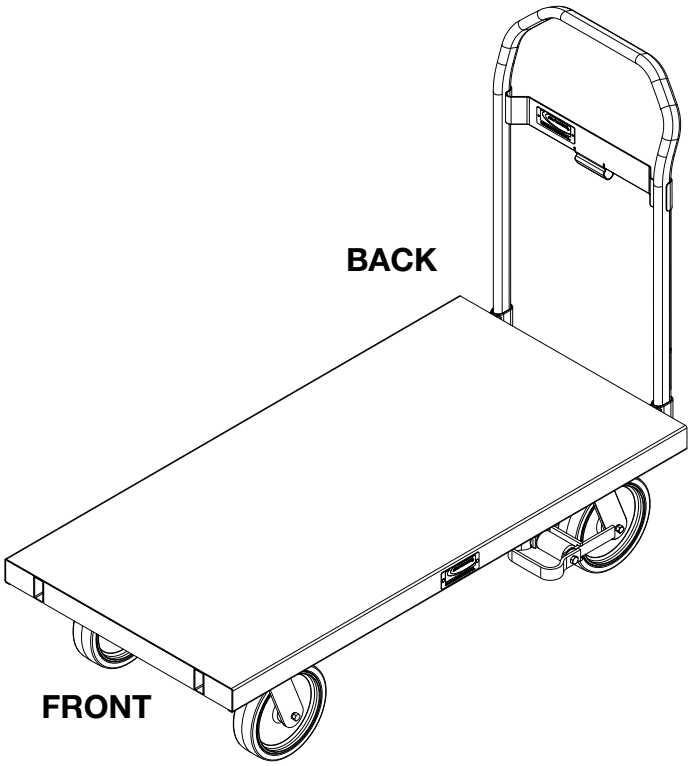

TOOLS NEEDED

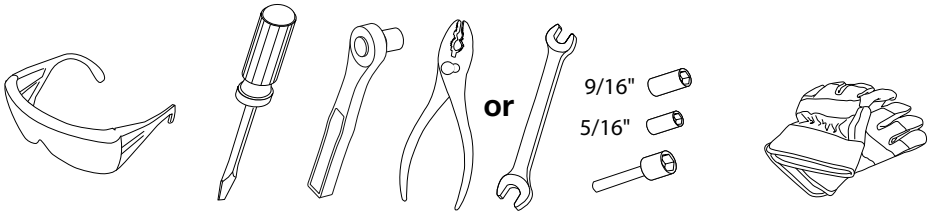

© 2016 Suncast Corporation, Batavia, IL

BEFORE YOU BEGIN

- Read instructions thoroughly prior to assembly.
  This kit contains parts that can be damaged if assembled incorrectly or in the wrong sequence.
- Please follow instructions.
  Suncast is not responsible for replacing parts lost or damaged due to incorrect assembly.
- Check for all parts before you begin assembly.
  Using the provided parts check list, verify that you have all the parts required to construct your cabinets.
- Assistance is required during parts of the assembly.

CAUTION

- This product is not a toy and is not intended for use by children.
- Exercise caution when moving fully loaded product.
- Do not sit or stand on top.
- This contains parts that can be damaged if assembled incorrectly or in the wrong sequence. Repair or replace broken parts immediately.
- Standard Duty Max load 1000 lbs.
- Heavy Duty Max Load 2000 lbs.

CAUTION

- We recommend cleaning your product with soap and water. Rinse and dry well before using..

HARDWARE

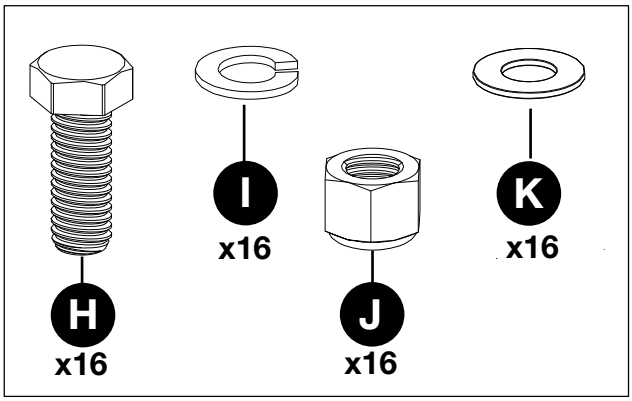

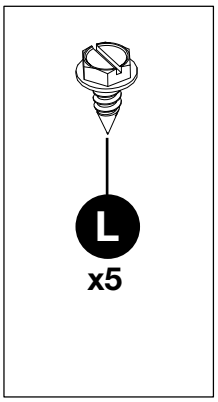

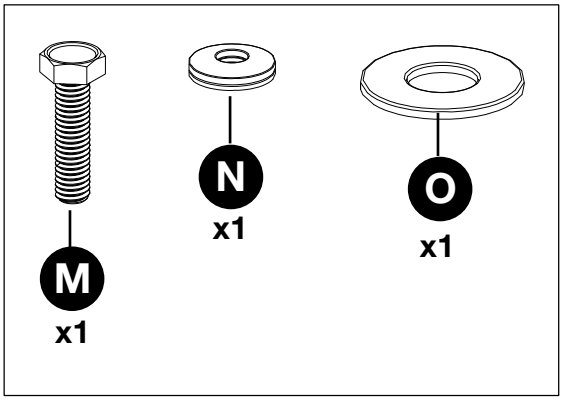

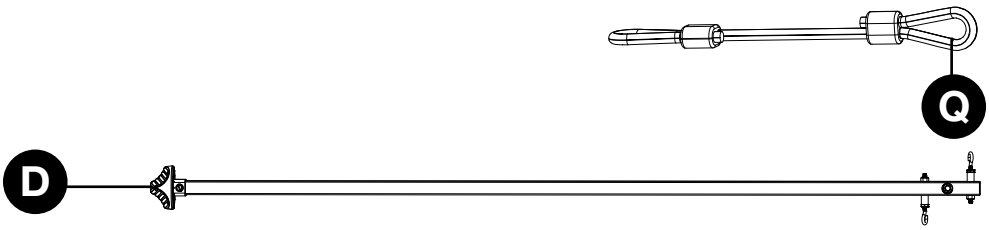

ASSEMBLY

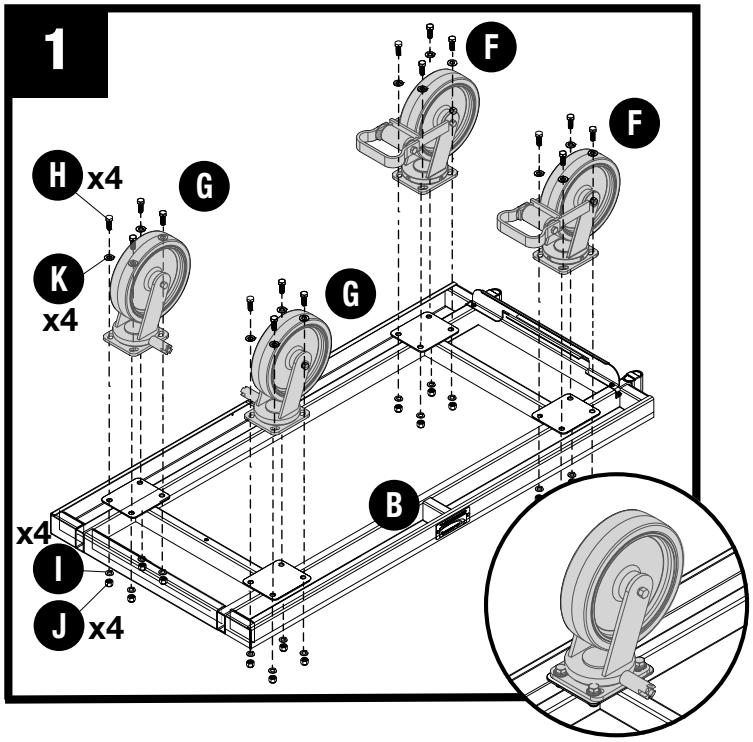

Attach each caster (G/F) to platform (B). Attach each using four bolts (H), four washers (K), four lock washers (I) and four nuts (J). Do not tighten completely. Repeat with other casters. Now tighten all (H) bolts.
Note: Lockout pin needs to face inward on (G) casters.

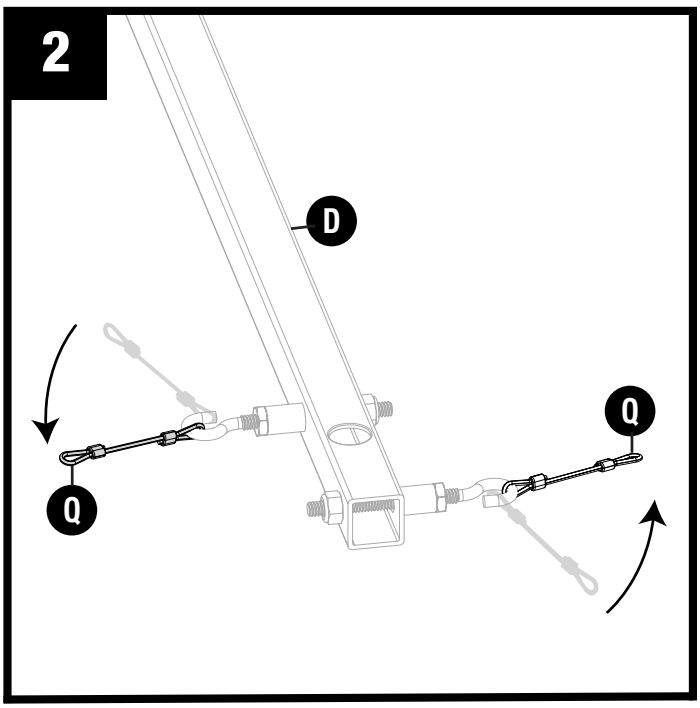

Thread lanyard (Q) onto Hooks connected to (D).

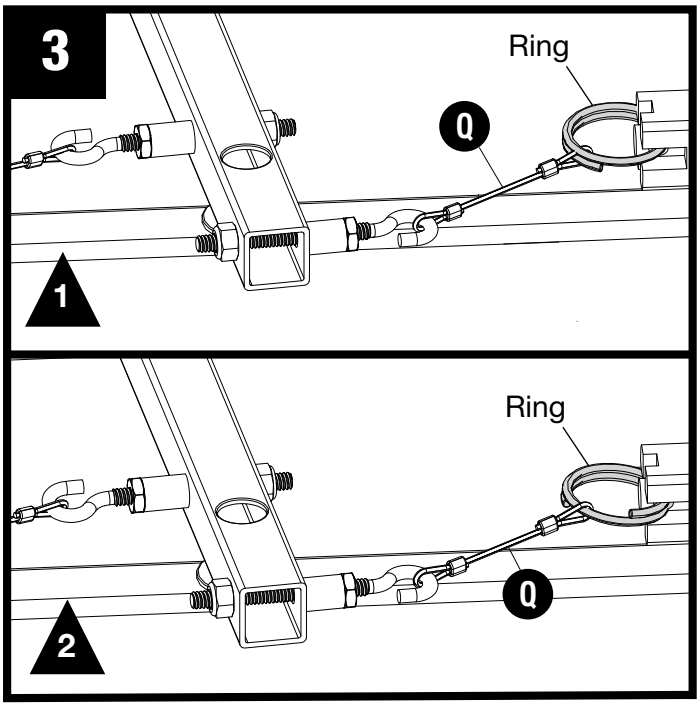

Thread lanyard (Q) onto key ring. Repeat other side.
Note: Ring should already be attached to caster.

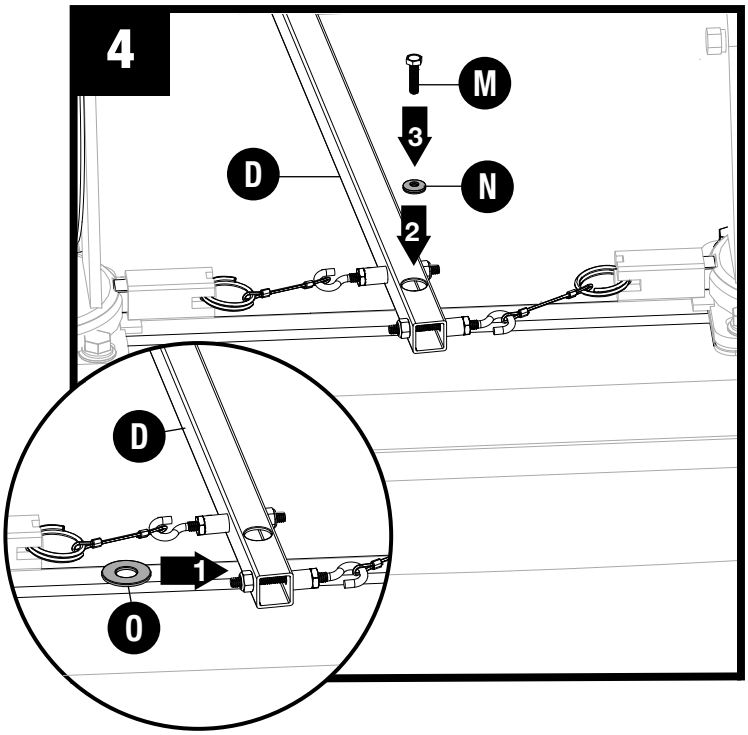

Slide washer (O) under (D) and attach to bar using sealing washer (N) and bolt (M).

ASSEMBLY CONTINUED

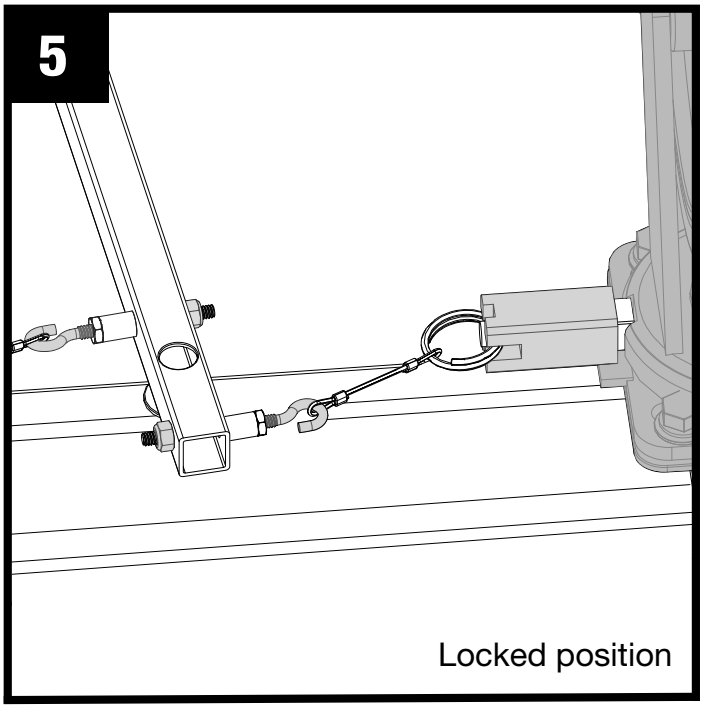

Swivel lockout complete

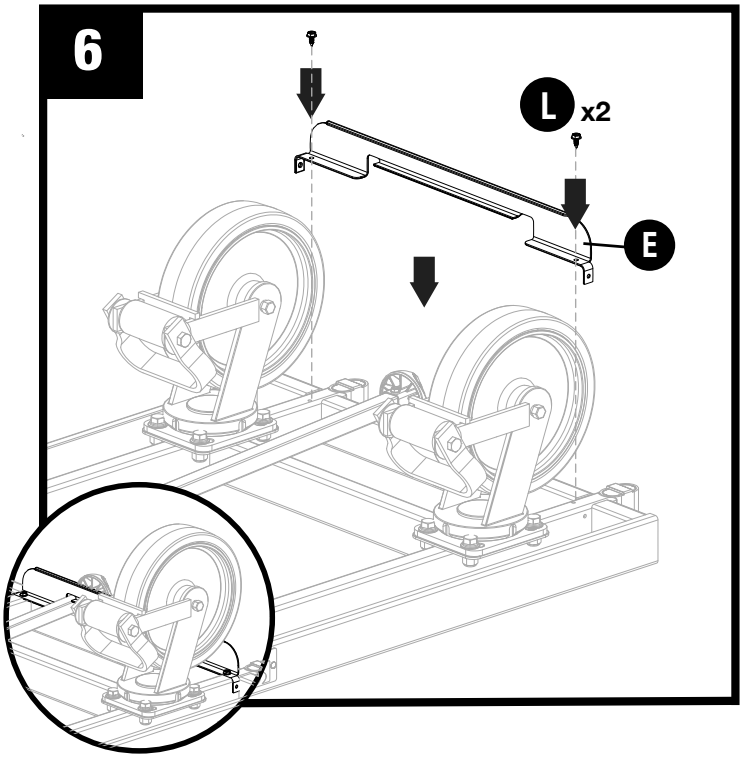

Attach bracket (E) to base using two screws (L).

HANDLE STORAGE

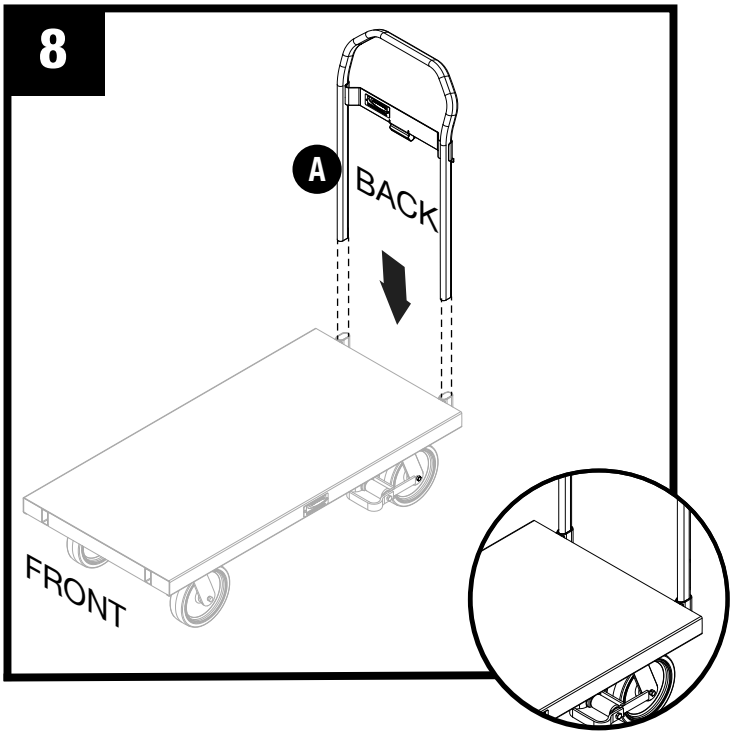

Insert handle (A) into slots. Push down and snap into place.

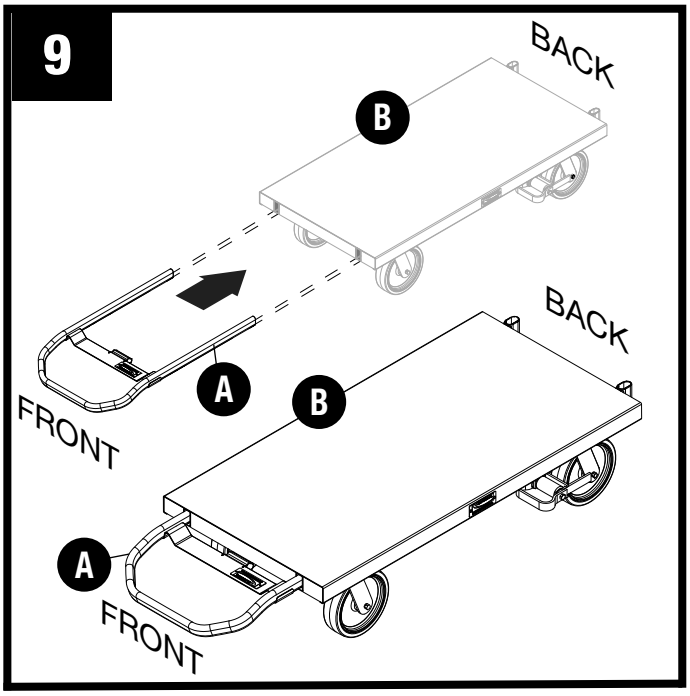

Temporary handle storage is located on front of platform (B).

LOCKING MECHANISM

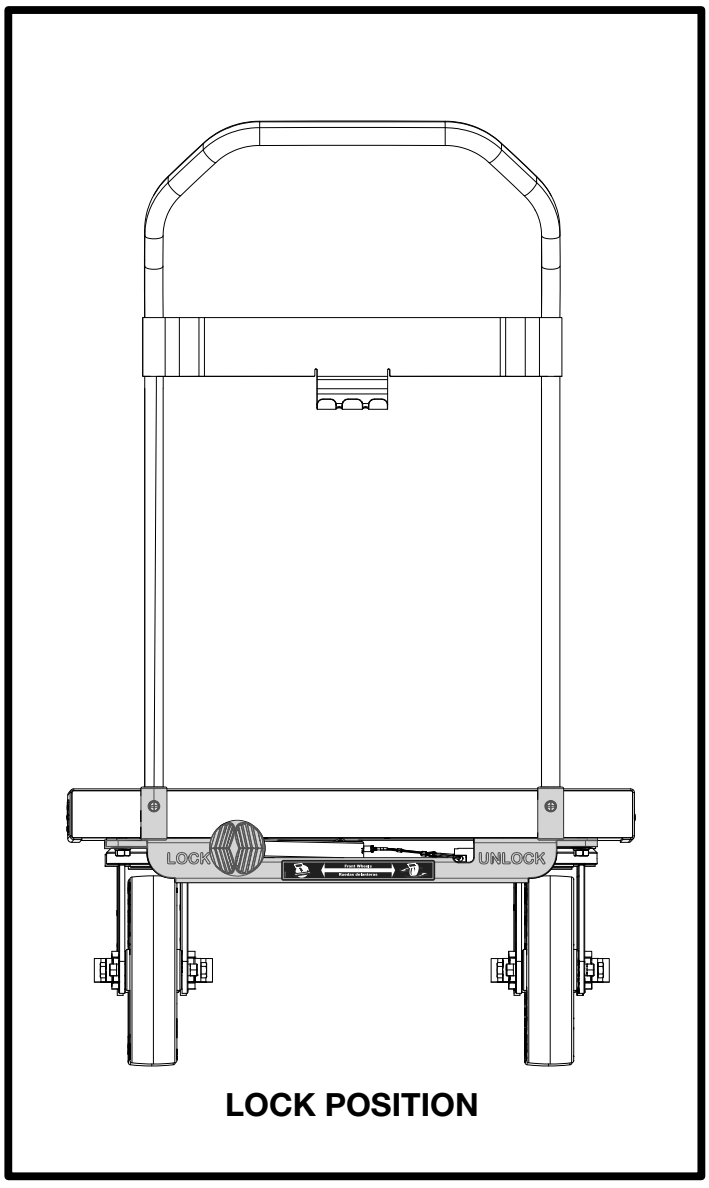

LOCK POSITION

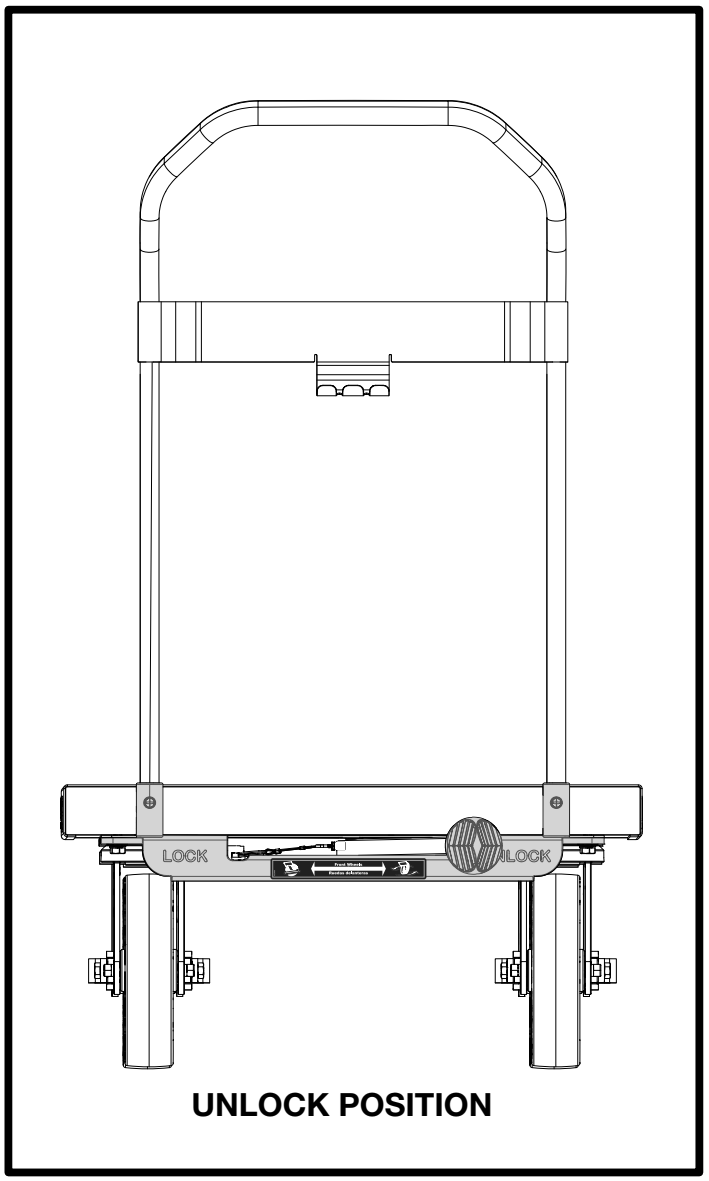

UNLOCK POSITION

Move handle to right to unlock. Make sure bar is seated in notch.

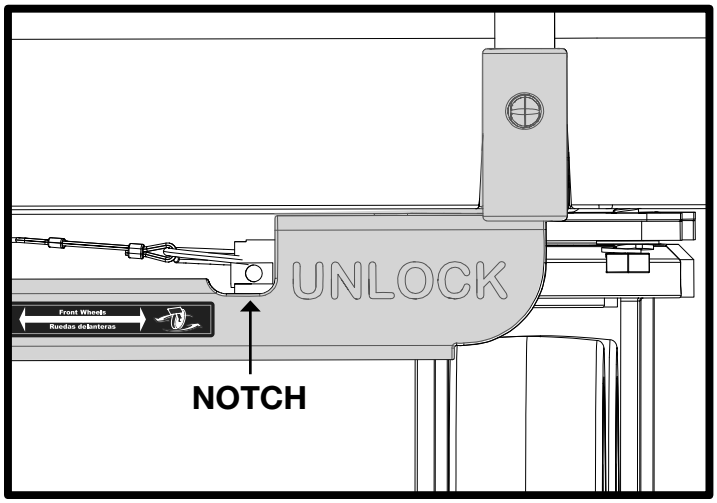

NOTCH

WARRANTY

SUNCAST® Limited Warranty

Your SUNCAST® product has a LIMITED WARRANTY AGAINST FAILURE RESULTING FROM DEFECTS IN WORKMANSHIP at the time of purchase. Incidental and consequential damages are not covered.

Warranty Claims

To file a warranty claim contact the manufacturer, SUNCAST® CORPORATION, 701 North Kirk Road, Batavia, Illinois, 60510. Call toll free (800) 846-2345 or visit www.suncast.com.

SUNCAST® will repair or replace only the parts that failed under the terms of the warranty. In some cases, the replacement parts may not be identical, but they shall be of equal or greater performance than the original part.

We may require proof of purchase. Proof of purchase may be the original dated store receipt. We may require evidence of the failure. Evidence of failure may include photographs or returning failed components to SUNCAST.®

WARRANTY LIMITATIONS

THIS WARRANTY COVERS ONLY DEFECTS THAT AFFECT THE FORM, FIT OR FUNCTION OF THE UNIT. It excludes natural aging of the unit, discoloration, ordinary wear and tear, ordinary weathering, sunlight fading, or rust. It excludes staining caused by mold, mildew or tree sap and damage caused by animals including insects, vermin or household pets. The warranty does not cover damage caused by Acts of Nature including but not limited to: wind in excess of 65 mph; tornado; hurricane; microburst; hail; flood; blizzard; extreme heat; pollution or fire events. The warranty does not cover damage caused by Sun energy reflected from “Low-E” windows or other reflective materials. The user is responsible for protecting the product from damage in this situation.

The following actions void the warranty: improper assembly; assembly on a foundation other than as described in the assembly instructions; use above intended and reasonable capacity; misuse; abuse; failure to perform ordinary maintenance; modification; cleaning with abrasive tools, exposing the unit to heat sources and vandalism. Painting, sandblasting, cleaning with harsh chemicals not recommended for plastics voids the warranty on resin components. Modification of the original product voids all warranties. Suncast assumes no liability for any modified product or consequences resulting from failure of a modified product. Damage due to moving, transporting,or relocating the product voids the warranty. Disassembly of this unit for reasons other than authorized repair voids the warranty.

Suncast® is not responsible for: loss of use of the unit; labor for repair; inspection fees or disposal costs.

THIS WARRANTY EXCLUDES FLOOR MODELS, CLEARANCE AND OPEN BOX UNITS.

Notice

Suncast® does not represent that this unit will meet city, county, state, homeowner’s association standards or zoning requirements. The owner is responsible for securing all permits and meeting other requirements needed for placement, construction and use.

THE MANUFACTURER'S LIABILITY HEREUNDER IS LIMITED SOLELY TO THE REPAIR OR REPLACEMENT OF THE DEFECTIVE PRODUCT OR PART AND THE MANUFACTURER SHALL IN NO EVENT BE LIABLE FOR ANY INCIDENTAL OR CONSEQUENTIAL DAMAGES WHICH MAY RESULT FROM ANY DEFECT IN MATERIAL OR WORKMANSHIP OR FROM THE BREACH OF ANY EXPRESS OR IMPLIED WARRANTY.

This warranty gives you specific legal rights, and you may also have other rights which vary from state to state. Some states do not allow the exclusion or limitation of incidental or consequential damages; the limitation or exclusion may not apply to you.

suncast
COMMERCIAL