COMMERCIAL

To learn about other Suncast products, please call
1-855-477-1260 or 1-630-879-2050.

Product Feedback? Go To: Suncastcommercial.com/feedback
OR email us at: feedback@suncastcommercial.com

ITEM NUMBER: BMJBCPD4824

SAFETY INFORMATION

- Read and follow the instructions thoroughly prior to assembly. The manufacturer is not responsible for replacing parts lost or damaged due to incorrect assembly.
- This product is not a toy and is not intended for use by children.
- Repair or replace broken parts immediately.
- Do not sit or stand on the lid. Do not exceed the maximum lid weight of 200 pounds.
- Do not exceed the maximum box weight of 300 pounds.
- Exercise caution when moving the fully loaded product. A team lift is recommended.
- Lift only by tubular handles on both sides.
- Never use this product to store flammables, explosives, or hazardous materials.
- To avoid the risk of suffocation, never allow children to play inside the container.
- This product may become susceptible to impact damage in freezing temperatures.
- Do not store this product near excessive heat.
- DO NOT SUSPEND THE JOB BOX.

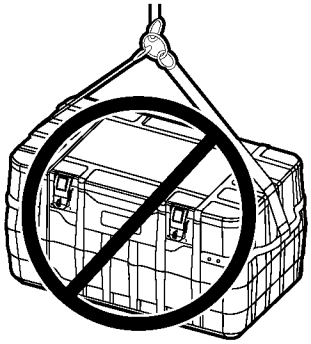

CARE AND CLEANING

- Use soap and water with a soft bristle brush to clean the product. DO NOT use bleach, ammonia, or caustic cleaners, as these will damage the finish.
- If power washing, keep the nozzle at least 18 in. away from the product.
- Locks, latches, and hinges should be lubricated regularly, and gas shocks wiped with a dry cloth to remove dust or dirt.

SUGGESTED ACCESSORIES AND USE
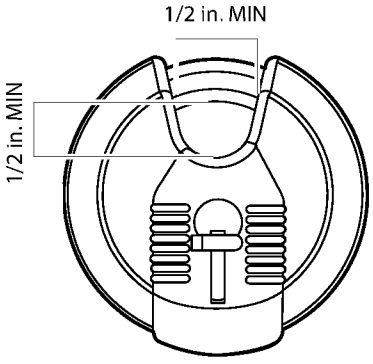
- The recommended padlock for this job box is a shrouded disc lock.
- The lock should fit the dimensions pictured